PRODUCT SUBMITTAL - THERM-A-BREAK™ Wing Anchor

Plastic

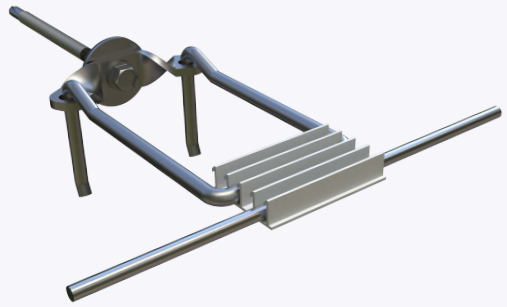

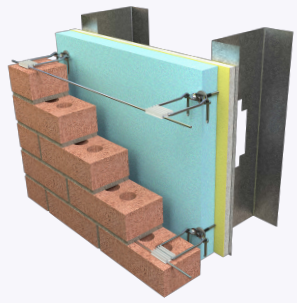

Material Conformance:

A high-performance single-screw veneer tie designed for metal stud backup walls and wood stud backups. Capable of supporting a 100 lb working load in both tension and compression at 0.05 in. deflection.

Screw: Type 304 stainless steel all-thread screw engineered for structural performance, corrosion resistance, and long-term durability. The proprietary thread design and geometry minimize conductive pathways while maintaining a continuous stainless steel anchor load path. A proprietary coating is applied at the wing-to-screw interface, and an additional 500-hour polymer coating enhances corrosion resistance in aggressive or high-moisture environments.

Wing: Premium Type 304 stainless steel wing designed to accommodate stainless steel or hot-dip galvanized veneer ties and hooks. The wing is protected with a 500-hour corrosion-resistant polymer coating to enhance durability and service life in exterior wall assemblies. The all-metal wing provides long-term dimensional stability and compatibility with common masonry reinforcement accessories and air barrier systems.

Thermal Performance: The THERM-A-BREAK™ Wing Anchor reduces thermal bridging through a geometry-driven wing and screw design that minimizes insulation displacement, reduces conductive cross-section, and limits conductive pathways through the wall assembly. The all-metal structural configuration maintains a continuous stainless steel anchor load path without reliance on polymer structural components for load transfer, supporting long-term durability, structural reliability, and improved thermal efficiency.

Washer: Dual-sealing oversized washer seals the screw penetration and secures insulation to the backup wall, helping reduce or eliminate the need for separate insulation fasteners depending on wall design and project conditions.

Meets TMS 402/602 & ACI / ASCE 530 Building Code Requirements and Specification for Masonry Structures

Stainless Steel: ASTM 580 / ASTM 580M – Type 304 or 316
Conforms to ASTM C954 & ASTM B117 (Salt Spray Test)

Wire: (Carbon Steel) ASTM A1064 / A1064M
Tensile Strength: 80,000 psi - Yield Point 70,000 psi

Zinc Coating:
Hot Dip Galvanized after fabrication: ASTM A153 / A153M-B2 (1.5 oz/ft^2)

Recycled Content:

Stainless Steel Type 304

68% Post-Consumer

18% Pre-Consumer

Structural Performance:

Capable of withstanding 100 lbs load in tension and compression without deforming or developing play in excess of .05 inch. (Test results available upon request)

Sizes/Finishes:

Wing Finish: 304 Stainless Steel with 500/HR Salt Spray Test

Screw Finish: 304 Stainless Steel with 1000/HR Salt Spray Test

Insulation / Gyp Board Thickness:

- ☐ 5/8" - 1 1/2"
- ☐ 2"-3"
- ☐ 3.5"-5"

Hook (Pintle): Diameter: 3/16”

Hook (Pintle):

- ☐ Hot dip galvanized
- ☐ Stainless Steel Type 304

Hook (Pintle): Length:

☐ 3” ☐ 4” ☐ 5” ☐ 6” ☐ 7”

Seismic Wire Hot Dip Galvanized: ☐ 9GA ☐ 3/16”

Reset | Print | Email

In order to email your submittal sheet information, you must have Adobe Acrobat installed on your computer.

NOTE

Patent Pending

The information provided herein is for general informational purposes only and does not constitute a professional opinion or engineering judgment. It is not intended to replace the design, detailing, or project-specific determinations of the licensed architect or engineer of record.
Each project is unique. The selection, application, suitability, and proper installation of these products are the sole responsibility of the design professional and installer based on project-specific conditions, substrate, exposure, and applicable codes.
All products and information referenced herein are subject to 3GEN Masonry Products, Inc.'s Terms and Conditions of Sale, including all limitations of liability, disclaimers of warranties, and exclusive remedies, as published and in effect at the time of sale.

Mailing Address
8528 Davis Blvd., #134-246 North
Richland Hills, TX 76182 Tel#:
1-800-556-5785

3genmp.com

Warehouse Address
8620 Spruiell Street NE,
Leeds, AL 35094 Tel#:
1-800-556-5785