PRODUCT SUBMITTAL - Barrel Anchor – Concrete Seismic Plastic Clip

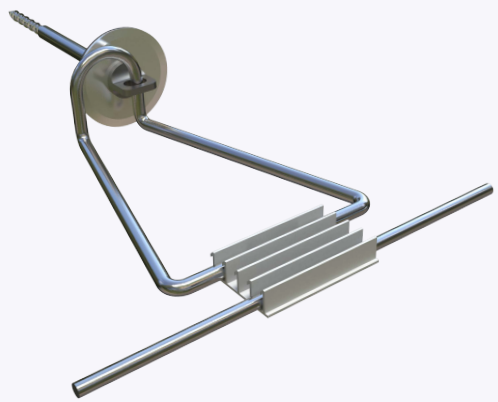

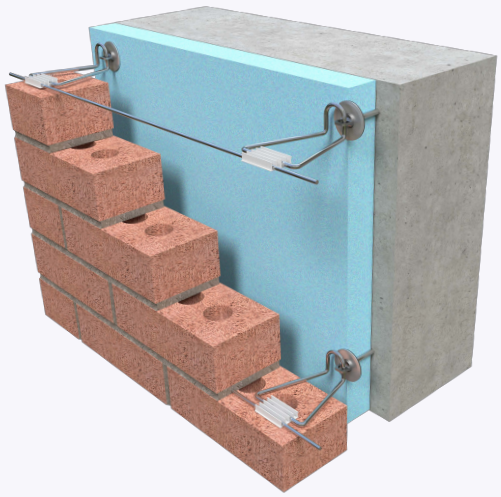

Recycled Content:

85% Post-Consumer
10% Post-Industrial

Material Conformance:

The Barrel Anchor concrete veneer anchor is used for anchoring brick to concrete block, poured concrete and wood stud.

Recommended Spacing is 16” O.C.

Meets TMS 402/602 & ACI / ASCE 530 Building Code Requirements and Specification for Masonry Structures

Wire: (Carbon Steel) ASTM A1064 / A1064M

Tensile Strength: 80,000 psi. - Yield Point 70,000 psi.

Hot dip galvanized after fabrication.

ASTM A153 / ASTM A153-B2 (1.5 oz/ft^2)

Conforms to ASTM C954 & ASTM B117 (Salt Spray Test)

Product Details:

Capable of withstanding 100 lbs load in tension and compression with-out deforming or developing play in excess of .05 inch. (Test results available upon request)

Sizes/Finishes:

Finish: Barrel Anchor: Polymer Coated 1000/HR Salt Spray Test

Barrel Anchor Wire Tie: Hot Dip Galvanized

Insulation / Gyp Board Thickness:

☐ 5/8” ☐ 1” ☐ 1 1/2” ☐ 2” ☐ 2 1/2”

☐ 3” ☐ 3 1/2” ☐ 4” ☐ 4 1/2”

Barrel Anchor Wire Tie: Diameter: 3/16”

Barrel Anchor Wire Tie: Hot dip galvanized

Barrel Anchor Wire Tie: Length

☐ 3” ☐ 4” ☐ 5” ☐ 6” ☐ 7”

☐ Seismic Plastic Clip

Seismic Wire Hot Dip Galvanized: ☐ 9 GA. ☐ 3/16”

Reset | Print | Email

In order to email your submittal sheet information, you must have Adobe Acrobat installed on your computer.

NOTE

The information provided herein is for general informational purposes only and does not constitute a professional opinion or engineering judgment. It is not intended to replace the design, detailing, or project-specific determinations of the licensed architect or engineer of record.
Each project is unique. The selection, application, suitability, and proper installation of these products are the sole responsibility of the design professional and installer based on project-specific conditions, substrate, exposure, and applicable codes.
All products and information referenced herein are subject to 3GEN Masonry Products, Inc.’s Terms and Conditions of Sale, including all limitations of liability, disclaimers of warranties, and exclusive remedies, as published and in effect at the time of sale.

Mailing Address
8528 Davis Blvd., #134-246 North
Richland Hills, TX 76182 Tel#:
1-800-556-5785

3genmp.com

Warehouse Address
8620 Spruiell Street NE,
Leeds, AL 35094 Tel#:
1-800-556-5785